NACE Standard TM0497-2012
Item No. 21231

Standard
Test Method

Measurement Techniques Related to Criteria for Cathodic Protection on Underground or Submerged Metallic Piping Systems

This NACE International standard represents a consensus of those individual members who have reviewed this document, its scope, and provisions. Its acceptance does not in any respect preclude anyone, whether he or she has adopted the standard or not, from manufacturing, marketing, purchasing, or using products, processes, or procedures not in conformance with this standard. Nothing contained in this NACE International standard is to be construed as granting any right, by implication or otherwise, to manufacture, sell, or use in connection with any method, apparatus, or product covered by Letters Patent, or as indemnifying or protecting anyone against liability for infringement of Letters Patent. This standard represents minimum requirements and should in no way be interpreted as a restriction on the use of better procedures or materials. Neither is this standard intended to apply in all cases relating to the subject. Unpredictable circumstances may negate the usefulness of this standard in specific instances. NACE International assumes no responsibility for the interpretation or use of this standard by other parties and accepts responsibility for only those official NACE International interpretations issued by NACE International in accordance with its governing procedures and policies which preclude the issuance of interpretations by individual volunteers.

Users of this NACE International standard are responsible for reviewing appropriate health, safety, environmental, and regulatory documents and for determining their applicability in relation to this standard prior to its use. This NACE International standard may not necessarily address all potential health and safety problems or environmental hazards associated with the use of materials, equipment, and/or operations detailed or referred to within this standard. Users of this NACE International standard are also responsible for establishing appropriate health, safety, and environmental protection practices, in consultation with appropriate regulatory authorities if necessary, to achieve compliance with any existing applicable regulatory requirements prior to the use of this standard.

CAUTIONARY NOTICE: NACE International standards are subject to periodic review, and may be revised or withdrawn at any time in accordance with NACE technical committee procedures. NACE International requires that action be taken to reaffirm, revise, or withdraw this standard no later than five years from the date of initial publication and subsequently from the date of each reaffirmation or revision. The user is cautioned to obtain the latest edition. Purchasers of NACE International standards may receive current information on all standards and other NACE International publications by contacting the NACE International *First*Service Department, 1440 South Creek Dr., Houston, Texas 77084-4906 (telephone +1 281-228-6200**).**

Revised 2012-06-23
Reaffirmed 2002-04-11
Approved 1997-12-22
NACE International
1440 South Creek Drive
Houston, TX 77084-4906
+1 281-228-6200
ISBN 1-57590-047-5
©2012, NACE International

Copyright NACE International
Provided by IHS under license with NACE
No reproduction or networking permitted without license from IHS

Licensee=University of Alberta/5966844001, User=sam, albert
Not for Resale, 05/03/2013 10:45:17 MDT

Foreword

This NACE International standard test method provides descriptions of the measurement techniques and cautionary measures most commonly used on underground and submerged piping other than offshore piping to determine whether a specific criterion has been met at a test site. Descriptions of measurement techniques and cautionary measures used on offshore pipelines and structures can be found in NACE SP0607/ISO 15589-2[1] for offshore pipelines, and SP0176[2] for offshore structures. This standard includes only those measurement techniques that relate to the criteria or special conditions, such as a net protective current, contained in NACE SP0169.[3] This standard is intended for use by corrosion control personnel concerned with the corrosion of underground or submerged piping systems that transport oil, gas, water, or other fluids.

The measurement techniques described require that the measurements be made in the field. Because the measurements are obtained under widely varying circumstances of field conditions and pipeline design, this standard is not as prescriptive as those NACE standard test methods that use laboratory measurements. Instead, this standard gives the user latitude to make testing decisions in the field based on the technical facts available.

This standard contains instrumentation and general measurement guidelines. It includes methods for voltage drop considerations when structure-to-electrolyte potential measurements are made and provides guidance to minimize incorrect data from being collected and used.

The measurement techniques provided in this standard were compiled from information submitted by committee members and others with expertise on the subject. Variations or other techniques not included may be equally effective. The complexity and diversity of environmental conditions may require the use of other techniques.

Appendix A (mandatory) contains information on the common types, use, and maintenance of reference electrodes. Appendix B (nonmandatory) contains information for the net protective current technique, which, while not a criterion, is a useful technique to reduce corrosion. Appendix C (nonmandatory) contains information regarding the use of coupons to evaluate cathodic protection (CP). While some engineers use these nonmandatory techniques, they are not universally accepted practices. However, there is ongoing research into their use.

The test methods in this standard were originally prepared by NACE Task Group T-10A-3, “Test Methods and Measurement Techniques Related to Cathodic Protection Criteria,” a component of Unit Committee T-10A, “Cathodic Protection.” It was reviewed by Task Group (TG) 020, reaffirmed in 2002 by Specific Technology Group (STG) 35, “Pipelines, Tanks, and Well Casings,” and revised in 2012 by TG 020. This standard is issued by NACE under the auspices of STG 35.

In NACE standards, the terms *shall, must, should*, and *may* are used in accordance with the definitions of these terms in the *NACE Publications Style Manual*. The terms *shall* and *must* are used to state a requirement, and are considered mandatory. The term *should* is used to state something good and is recommended, but is not considered mandatory. The term *may* is used to state something considered optional.

Copyright NACE International
Provided by IHS under license with NACE
No reproduction or networking permitted without license from IHS
Licensee=University of Alberta/5966844001, User=sam, albert
Not for Resale, 05/03/2013 10:45:17 MDT

NACE International
Standard Practice

Measurement Techniques Related to Criteria for Cathodic Protection on Underground or Submerged Metallic Piping Systems

Contents

1. General 1
2. Definitions 1
3. Safety Considerations 3
4. Instrumentation and Measurement Guidelines 4
5. Structure-to-Electrolyte Potential Measurements 5
6. Causes of Inaccurate Measurements 9
7. Voltage Drops Other Than Across the Pipe Metal/Electrolyte Interface 11
8. Test Method 1—Structure-to-Electrolyte Potential of Metallic Piping with CathodicProtection Applied 13
9. Test Method 2—Polarized Structure-to-Electrolyte Potential of Metallic Piping 15
10. Test Method 3—Cathodic Polarization of Metallic Piping 17
References 22
Appendix A: Reference Electrodes (Mandatory) 23
Appendix B: Net Protective Current (Nonmandatory) 25
Appendix C: Using Coupons to Determine Adequacy of Cathodic Protection (Nonmandatory) 26
Bibliography 22
FIGURES:
Figure 1: Instrument connections 6
Figure 1 (a): Instrument connection (polarity option 1) 6
Figure 1 (b): Instrument connection (polarity option 2) 7
Figure 2: Structure-to-electrolyte potential corrections for pipeline current flow 13
Figure 2 (a): Correction when pipeline current flows toward pipe test connection 12
Figure 2 (b): Correction when pipeline current flows away from pipe test connection 13
Figure 3: Polarization decay 19
Figure 4: Polarization formation 21

--`,```,``,`,,``,,,,``,,,,,``,-`-`,,`,,`,`,,`---

Copyright NACE International
Provided by IHS under license with NACE
No reproduction or networking permitted without license from IHS

Licensee=University of Alberta/5966844001, User=sam, albert
Not for Resale, 05/03/2013 10:45:17 MDT

Section 1: General

1.1 This standard describes and illustrates testing procedures for measuring potentials that are used to determine whether a CP criterion is achieved at a test site on underground or submerged metallic piping.

1.2 The provisions of this standard shall be applied by personnel who have the knowledge and understanding of the fundementals of cathodic protection of buried and submerged metallic piping systems acquired by education and related practical experience.

1.3 Special conditions in which a given test technique is ineffective or only partially effective sometimes exist. Refer to Paragraphs 5.9 and 6.1. Deviation from this standard may be warranted in specific situations.

Section 2: Definitions[1]

Anode: The electrode of an electrochemical cell at which oxidation occurs. Electrons flow away from the anode in the external circuit. Corrosion usually occurs and metal ions enter the solution at the anode.

Cathode: The electrode of an electrochemical cell at which reduction is the principal reaction. Electrons flow toward the cathode in the external circuit.

Cathodic Polarization: The change of electrode potential in the active (negative) direction caused by current across the electrode/electrolyte interface. See *Polarization.*

Cathodic Protection: A technique to reduce the corrosion of a metal surface by making that surface the cathode of an electrochemical cell.

Cathodic Protection Coupon: A metal sample representing the pipeline at the test site, used for cathodic protection testing, and having a chemical composition approximating that of the pipe. The coupon size should be small to avoid excessive current drain on the cathodic protection system.

Coating: A liquid, liquefiable, or mastic composition that, after application to a surface, is converted into a solid protective, decorative, or functional adherent film.

Conductor: A bare or insulated material suitable for carrying electric current.

Corrosion: The deterioration of a material, usually a metal, that results from a reaction with its environment.

Corrosion Potential (E_{corr}): The potential of a corroding surface in an electrolyte relative to a reference electrode under open-circuit conditions (also known as *Rest Potential, Open-Circuit Potenti*al, or *Freely Corroding Potential*).

Criterion: A standard for assessment of the effectiveness of a cathodic protection system.

Electrical Isolation: The condition of being electrically separated from other metallic structures or the environment.

Electrode: A conductor used to establish contact with an electrolyte and through which current is transferred to or from an electrolyte.

Electrode Potential: The potential of an electrode in an electrolyte as measured against a reference electrode. (The electrode potential does not include any resistance losses in potential in either the electrolyte or the external circuit. It represents the reversible work to move a unit of charge from the electrode surface through the electrolyte to the reference electrode.)

Electrolyte: A chemical substance containing ions that migrate in an electric field. For the purpose of this standard, *electrolyte* refers to the soil or liquid, including contained moisture and other chemicals, next to and in contact with a buried or submerged metallic piping system.

[1] Definitions in this section reflect common usage among practicing corrosion control personnel and apply specifically to how terms are used in this standard. As much as possible, these definitions are in accord with those in NACE/ASTM G193.[4]

Copyright NACE International
Provided by IHS under license with NACE
No reproduction or networking permitted without license from IHS
Licensee=University of Alberta/5966844001, User=sam, albert
Not for Resale, 05/03/2013 10:45:17 MDT

Foreign Structure: Any metallic structure that is not intended as part of a system under cathodic protection.

Free Corrosion Potential: See *Corrosion Potential.*

Galvanic Anode: A metal that provides sacrificial protection to another metal that is more noble when electrically coupled in an electrolyte. This type of anode is the current source in one type of cathodic protection.

Holiday: A discontinuity in a protective coating that exposes unprotected surface to the environment.

Impressed Current: An electric current supplied by a device employing a power source that is external to the electrode system. (An example is direct current for cathodic protection.)

Instant-Off Potential: The polarized half-cell potential of an electrode taken immediately after the cathodic protection current is stopped, which closely approximates the potential without IR drop (i.e., the polarized potential) when the current was on.

Interference: Any electrical disturbance on a metallic structure as a result of stray current.

Isolation: *See Electrical Isolation.*

Long-Line Current: Current through the earth between an anodic and a cathodic area that returns along an underground metallic structure.

Off or On: A condition whereby cathodic protection current is either turned off or on.

Parallax Error: An apparent shift in the position of a needle on an analog display, caused by a change in the observer's position that provides a new line of sight.

Pipe-to-Electrolyte Potential: See *Structure-to-Electrolyte Potential*.

Pipe-to-Soil Potential: See *Structure-to-Electrolyte Potential.*

Polarization: The change from the open-circuit potential as a result of current across the electrode/electrolyte interface.

Polarized Potential: The potential across the structure/electrolyte interface that is the sum of the corrosion potential and the cathodic polarization.

Potential Gradient: A change in the potential with respect to distance, expressed in millivolts per unit of distance.

Protection Potential: A measured potential meeting the requirements of a cathodic protection criterion.

Reference Electrode: An electrode whose open-circuit potential is constant under similar conditions of measurement, which is used for measuring the relative potentials of other electrodes.

Resistance to Electrolyte: The resistance of a structure to the surrounding electrolyte.

Reverse-Current Switch: A device that prevents the reversal of direct current through a metallic conductor.

Shielding: (1) Protecting; protective cover against mechanical damage. (2) Preventing or diverting the cathodic protection current from its natural path. For the purposes of this standard, only the second part of the definition applies.

Shorted Pipeline Casing: A casing that is in metallic contact with the carrier pipe.

Side Drain Potential: A potential gradient measured between two reference electrodes, one located over the pipeline and the other located a specified distance lateral to the direction of the pipe.

Sound Engineering Practices: Reasoning exhibited or based on thorough knowledge and experience, logically valid, and having true premises showing good judgment or sense in the application of science.

Stray Current: Current through paths other than the intended circuit.

Copyright NACE International
Provided by IHS under license with NACE
No reproduction or networking permitted without license from IHS
Licensee=University of Alberta/5966844001, User=sam, albert
Not for Resale, 05/03/2013 10:45:17 MDT

Structure-to-Electrolyte Potential: The potential difference between the surface of a buried or submerged metallic structure and the electrolyte that is measured with reference to an electrode in contact with the electrolyte.

Telluric Current: Current in the earth that results from geomagnetic fluctuations.

Test Lead: A wire or cable attached to a structure for connection of a test instrument to make cathodic protection potential or current measurements.

Voltage: An electromotive force or a difference in electrode potentials expressed in volts.

Voltage Drop: The voltage across a resistance according to Ohm's Law.

Voltage Spiking: A momentary surging of potential that occurs on a pipeline when the protective current flow from an operating cathodic protection device is interrupted or applied. This phenomenon is the result of inductive and capacitive electrical characteristics of the system and may be incorrectly recorded as an off or on structure-to-electrolyte potential measurement. This effect may last for several hundred milliseconds and is usually larger in magnitude near the connection of the cathodic protection device to the pipeline. An oscilloscope or similar instrument may be necessary to identify the magnitude and duration of the spiking.

Wire: A slender rod or filament of drawn metal. In practice, the term is also used for smaller gauge conductors (size 6 mm^2 [No. 10 AWG[(2)]] or smaller).

Section 3: Safety Considerations

3.1 Appropriate safety precautions, including the following, shall be observed when electrical measurements are made.

3.1.1 Be knowledgeable and qualified in electrical safety precautions before installing, adjusting, repairing, removing, or testing impressed current cathodic protection equipment.

3.1.2 Use properly insulated test lead clips and terminals to avoid contact with unanticipated high voltage (HV). Attach test clips one at a time using a single-hand technique for each connection.

3.1.3 Use caution when long test leads are extended near overhead high-voltage alternating current (HVAC) power lines, which can induce hazardous voltages onto the test leads. High-voltage direct current (HVDC) power lines do not induce voltages under normal operation, but transient conditions may cause hazardous voltages.

3.1.3.1 Refer to NACE SP0177[5] for additional information about electrical safety.

3.1.4 Use caution when making tests at electrical isolation devices. Before proceeding with further tests, use appropriate voltage detection instruments or voltmeters with insulated test leads to determine whether hazardous voltages may exist.

3.1.5 Avoid testing when thunderstorms are in the area. Remote lightning strikes can create hazardous voltage surges that travel along the pipe under test.

3.1.6 Use caution when stringing test leads across streets, roads, and other locations subject to vehicular and pedestrian traffic. When conditions warrant, use appropriate barricades, flagging, and flag persons.

3.1.7 If entry into excavations or confined spaces is required, then confined space training should be undertaken in accordance with local, state, and federal regulations and recommendations.

3.1.8 Observe appropriate electrical codes and applicable safety regulations.

3.1.9 Refer to NACE SP0207[6] and work in progress by TG 388[7] for additional safety considerations.

[(2)] American Wire Gauge (AWG).

Copyright NACE International
Provided by IHS under license with NACE
No reproduction or networking permitted without license from IHS
Licensee=University of Alberta/5966844001, User=sam, albert
Not for Resale, 05/03/2013 10:45:17 MDT

Section 4: Instrumentation and Measurement Guidelines

4.1 Accurate cathodic protection electrical measurements require proper selection and use of instruments. Structure-to-electrolyte potential, voltage drop, potential difference, and similar measurements require instruments that have appropriate voltage ranges. The user must know the capabilities and limitations of the equipment, calibration of the equipment, follow the manufacturer's instruction manual, and be skilled in the use of electrical instruments. Failure to select and use instruments correctly may cause personal harm or errors in cathodic protection measurements.

4.1.1 Analog instruments are usually specified in terms of input resistance or internal resistance. This is usually expressed as ohms per volt of full meter scale deflection.

4.1.2 Digital instruments are usually specified in terms of input impedance expressed as megohms (MΩ).

4.2 Factors that may influence instrument selection for field testing include:

(a) Input impedance (digital instruments);

(b) Input resistance or internal resistance (analog instruments);

(c) Sensitivity;

(d) Conversion speed of analog-to-digital converters used in digital or data logging instruments;

(e) Accuracy;

(f) Instrument resolution;

(g) Ruggedness;

(h) Alternating current (AC) and radio frequency (RF) signal rejection; and

(i) Temperature and climate limitations;

(j) Scales appropriate for the measurements to be made;

4.2.1 Some instruments are capable of measuring and processing voltage readings many times per second. Evaluation of the input waveform processing may be required if an instrument does not give consistent results.

4.2.2 Measurement of structure-to-electrolyte potentials on pipelines affected by dynamic stray currents may require the use of recording or analog instruments to improve measurement accuracy. Dynamic stray currents include those from electric railway systems, HVDC transmission systems, mining equipment, and telluric currents.

4.3 Instrument Effects on Voltage Measurements

4.3.1 To measure structure-to-electrolyte potentials accurately, a digital voltmeter must have a high input impedance (high internal resistance, for an analog instrument) compared with the total resistance of the measurement circuit.

4.3.1.1 An input impedance of 10 MΩ is often sufficient for a digital meter under normal conditions to eliminate significant errors from voltage drops, but a much higher requirement may be necessary for conditions with significant contact or other measurement circuit resistances. However, an instrument with a lower input impedance can produce valid data if circuit contact errors are considered. One means of making accurate measurements is to use a potentiometer circuit in an analog meter.

4.3.1.2 The accuracy of potential measurements should be verified by using an instrument having two or more input impedances (internal resistance, for analog instruments) and comparing potential values measured using different input impedances. If the measured values are virtually the same, the accuracy is acceptable. Corrections need to be made if measured values are not virtually identical. Digital voltmeters that have a constant input impedance do not indicate a measurement error by changing voltage ranges. An alternative is to use a meter with a potentiometer circuit.

Copyright NACE International
Provided by IHS under license with NACE
No reproduction or networking permitted without license from IHS
Licensee=University of Alberta/5966844001, User=sam, albert
Not for Resale, 05/03/2013 10:45:17 MDT

4.3.1.3 A voltmeter measures the potential across its terminals within its design accuracy. However, current flowing through the instrument creates measurement errors caused by voltage drops that occur in all resistive components of a measurement circuit.

4.3.2 Analog-to-digital converters used in digital and data logging instruments might sample only a portion of the input wave form and provide incorrect voltage values.

4.3.3 Parallax errors on an analog instrument can be minimized by viewing the needle perpendicular to the face of the instrument on the centerline projected from the needle point.

4.4 Instrument Accuracy

4.4.1 Instruments shall be checked for accuracy before use by comparing readings to a standard voltage cell, to another acceptable voltage source, or to another appropriate instrument known to be accurate. If an instrument is insufficiently accurate, the instrument shall be recalibrated.

Section 5: Structure-to-Electrolyte Potential Measurements

5.1 Instruments used to measure AC voltage, DC voltage, or other electrical functions usually have one terminal designated "Common" (COM). This terminal either is black in color or has a negative (-) symbol. The positive terminal either is red in color or has a positive (+) symbol. The positive and negative symbols in the meter display indicate the current flow direction through the instrument (Figure 1[a]). For example, a positive symbol in the meter display indicates current flowing from the positive terminal through the meter to the negative terminal. One instrument test lead is usually black in color and the other red. The black test lead is connected to the negative terminal of the instrument and the red lead to the positive terminal.

5.2 Voltage measurements should be made using the lowest practicable range on the instrument. A voltage measurement is more accurate when it is measured in the upper two-thirds of a range selected for a particular instrument. Errors can occur, for example, when an instrument with a 2 V range is used to measure a voltage of 15 mV. Such a value might be a voltage drop caused by current flowing in a metal pipeline or through a calibrated shunt. A much more accurate measurement would be made using an instrument having a 20 mV range.

5.3 The usual technique to determine the DC voltage across battery terminals, pipeline metal/electrolyte interface, or other DC system is to connect the black test lead to the negative side of the circuit and the red test lead to the positive side of the circuit. When connected in this manner, an analog instrument needle moves in an upscale (clockwise) direction indicating a positive value with relation to the negative terminal. A digital instrument connected in the same manner displays a digital value, usually preceded by a positive (+) symbol. In each situation, the measured voltage is positive with respect to the instrument's negative terminal. (See instrument connections in Figure 1[a].)

5.4 The voltage present between a reference electrode and a metal pipe can be measured with a voltmeter. The reference electrode potential is normally positive with respect to ferrous pipe; conversely, the ferrous pipe is negative with respect to the reference electrode.

5.5 A structure-to-electrolyte potential is measured using a DC voltmeter having an appropriate input impedance (or internal resistance, for an analog instrument), voltage range(s), test leads, and a stable reference electrode, such as a saturated copper/copper sulfate (CSE), silver/silver chloride (Ag/AgCl), or saturated potassium chloride (KCl) calomel reference electrode (SCE). The CSE is usually used for measurements when the electrolyte is soil or fresh water and less often for salt water. When a CSE is used in a high-chloride environment, the stability (lack of contamination) of the CSE must be determined before the readings may be considered valid. The Ag/AgCl reference electrode is usually used in seawater environments. The SCE is used more often for laboratory work. However, more rugged, polymer body, gel-filled SCEs are available, though modifications may be necessary to increase contact area with the environment. See Appendix A (mandatory) for further information on reference electrodes.

5.6 Meter Polarity

5.6.1 Polarity Option 1

Structure-to-electrolyte potentials may be measured by connecting the instrument negative terminal to the pipe and the positive terminal to the reference electrode, which is in contact with the pipe electrolyte. With this connection, the instrument indicates that the reference electrode is positive with respect to the pipe. Because the reference electrode has a positive

--`,```,`,`,,`,`,,,,``,,,,,``,,-`-`,,`,,`,`,,`---

Copyright NACE International
Provided by IHS under license with NACE
No reproduction or networking permitted without license from IHS

Licensee=University of Alberta/5966844001, User=sam, albert
Not for Resale, 05/03/2013 10:45:17 MDT

value with respect to the pipe, the pipe voltage is negative with respect to the reference electrode (see Figure 1[a]). This negative structure-to-electrolyte potential is the value used for NACE criteria contained in NACE SP0169.

5.6.2 Polarity Option 2

Structure-to-electrolyte potential measurements may be made with the reference electrode connected to the instrument negative terminal and the pipeline to the positive terminal. Figure 1(b) illustrates this connection.

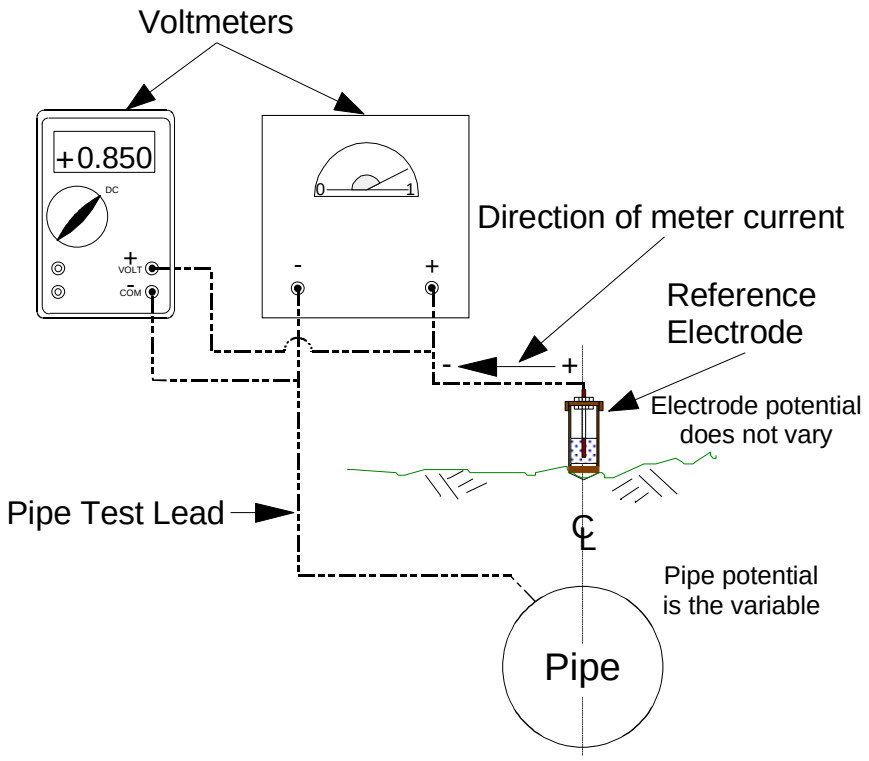

Figure 1(a): Instrument connection (polarity option 1)

Copyright NACE International
Provided by IHS under license with NACE
No reproduction or networking permitted without license from IHS
Licensee=University of Alberta/5966844001, User=sam, albert
Not for Resale, 05/03/2013 10:45:17 MDT

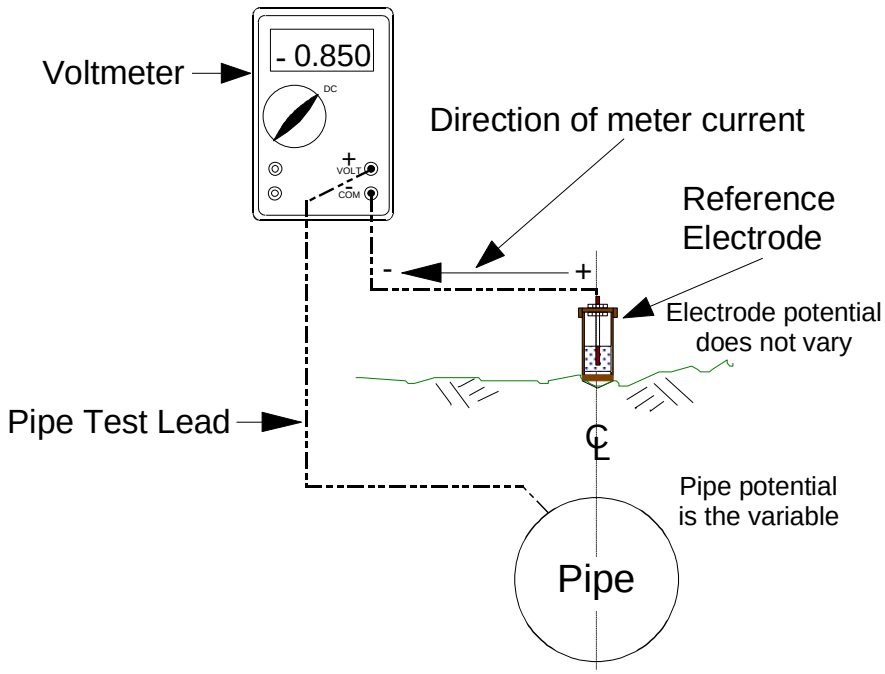

Figure 1 (b): Instrument connection (polarity option 2)

Figure 1: Instrument connections.

5.7 Accurate structure-to-electrolyte potential measurements of a buried pipe are made with the reference electrode placed close to the metal/electrolyte interface of the pipe. The common practice, however, is to place the reference electrode as close to the pipe as practicable, which is usually at the surface of the earth above the centerline of the pipe. (See Figure 1[a].) This measurement includes a combination of the voltage drops associated with the:

(a) Voltmeter;

(b) Test leads;

(c) Reference electrode;

(d) Electrolyte;

(e) Coating, if applied;

(f) Pipe; and

(g) Pipe metal/electrolyte interface.

5.8 The structure-to-electrolyte potential measurement as described above is a result of the:

(a) Voltage drop created by current flowing through the electrical resistances of the items listed in Paragraph 5.7; and

(b) For coated pipe, the influence of coating holidays, depending on their location, number, and size.

5.9 Structure-to-electrolyte potential measurements made to determine the level of cathodic protection at the test site should consider the following:

--`,```,``,`,,``,,,,``,,,,,``,-`-`,,`,,`,`,,`---

Copyright NACE International
Provided by IHS under license with NACE
No reproduction or networking permitted without license from IHS

Licensee=University of Alberta/5966844001, User=sam, albert
Not for Resale, 05/03/2013 10:45:17 MDT

(a) Effectiveness of coatings, particularly those known or suspected to be deteriorated or damaged;

(b) Bare sections of pipe;

(c) Bonds to mitigate interference;

(d) Parallel coated pipelines, electrically connected and polarized to different potentials;

(e) Shielding;

(f) Effects of other structures on the measurements;

(g) History of corrosion leaks and repairs;

(h) Location of impressed current anodes;

(i) Unknown, inaccessible, or direct connected galvanic anodes;

(j) Location of isolation devices, including high-resistance pipe connections and compression couplings;

(k) Presence of electrolytes, such as unusual corrosives, chemical spills, extreme soil resistivity changes, acidic waters, and contamination from sewer spills;

(l) Location of shorted or isolated casings;

(m) DC interference currents, such as HVDC, telluric, welding equipment, foreign rectifier, mining equipment, and electric railway or transit systems;

(n) Contacts with other metals or structures;

(o) Locations where the pipe enters and leaves the electrolyte;

(p) Areas of construction activity during the pipeline history;

(q) Underground metallic structures close to or crossing the pipeline;

(r) Valves and other appurtenances; and

(s) HVAC power lines.

5.10 Voltage drops other than those across the structure-to-electrolyte interface shall be considered for valid interpretation of structure-to-electrolyte voltage measurements made to satisfy a criterion. Measurement errors must be minimized to ensure reliable structure-to-electrolyte potential measurements. Synchronous interruption or other valid methods can be used to evaluate the effect of voltage drops on the structure-to-electrolyte potential measurement.

5.11 The effect of voltage drops on a structure-to-electrolyte potential measurement can be determined by interrupting all significant current sources that influence the potential and then making the measurement (for the use of cathodic protection coupons to address this issue, refer to Appendix C). This measurement is referred to as an instant-off potential. The measurement must be made without perceptible delay after current interruption to avoid loss of polarization. The voltage value measured is considered to be the polarized potential of the pipe at that location. Because the current interruption may cause a voltage spike, recording the spike as the instant-off potential must be avoided. The magnitude and duration of the voltage spike can vary; however, the duration is usually within 0.5 second. The following are examples of when it may not be practical to interrupt all current sources to make the instant-off potential measurement.

5.11.1 Galvanic Anodes

5.11.1.1 Galvanic anodes connected directly to the pipe without benefit of aboveground test stations or connections. Interruption requires excavation of the connections.

5.11.2 Impressed Current Systems

--`,,```,,,,````-`-`,,`,,`,`,,`---

Copyright NACE International
Provided by IHS under license with NACE
No reproduction or networking permitted without license from IHS

Licensee=University of Alberta/5966844001, User=sam, albert
Not for Resale, 05/03/2013 10:45:17 MDT

5.11.2.1 Galvanic anodes directly connected to piping protected using an impressed current system;

5.11.2.2 Multiple impressed current sources;

5.11.2.3 Impressed current devices on foreign piping; and

5.11.2.4 Numerous cross bonds to parallel pipelines.

5.11.3 Natural and manmade stray currents, such as:

(a) Telluric currents;

(b) Electrical mass transit;

(c) Mining operations;

(d) Welding operations;

(e) High voltage transmission lines, etc.; and

(f) Long-line currents.

5.12 When voltage drops have been evaluated at a test location and the structure-to-electrolyte potential found to be satisfactory, the "on" structure-to-electrolyte potential value may be used for monitoring until significant environmental, structural, or cathodic protection system parameters change.

5.12.1 Significant environmental, structural, or cathodic protection system parameter changes may include:

(a) Replacement or addition of piping;

(b) Addition, relocation, or deterioration of cathodic protection systems;

(c) Failure of electrical isolating devices;

(d) Effectiveness of coatings; and

(e) Influence of foreign structures.

5.13 After a CP system is operating, time may be required for the pipe to polarize. This should be considered when the potential is measured at a test site on a newly protected pipe or after a cathodic protection device is reenergized.

Section 6: Causes of Inaccurate Measurements

6.1 Some factors that contribute to inaccurate potential measurements include:

6.1.1 Pipe and instrument test leads

(a) Broken or frayed wire strands (may not be visible inside the insulation);

(b) Damaged or defective test lead insulation that allows the conductor to contact wet vegetation, the electrolyte, or other objects;

(c) Loose, broken, or faulty pipe or instrument connections; and

(d) Dirty or corroded connection points.

6.1.2 Reference electrode condition and placement

--`,```,``,`,,``,,,,``,,,,,``,-`-`,,`,,`,`,,`---

Copyright NACE International
Provided by IHS under license with NACE
No reproduction or networking permitted without license from IHS

Licensee=University of Alberta/5966844001, User=sam, albert
Not for Resale, 05/03/2013 10:45:17 MDT

(a) Contaminated reference electrode solution or rod, and solutions of insufficient quantity or saturation (only laboratory-grade chemicals and distilled water, if water is required, should be used in a reference electrode);

(b) Reference electrode plug not sufficiently porous to provide a conductive contact to the electrolyte;

(c) Porous plug contaminated by asphalt, oil, or other foreign materials;

(d) High-resistance contact between reference electrode and high resistivity electrolytes, such as dry or frozen soil, rock, gravel, vegetation, or paving material;

(e) Reference electrode placed in the potential gradient of an anode;

(f) Reference electrode positioned in the potential gradient of a metallic structure other than the one with the potential being measured;

(g) Shielding;

(h) Defective permanently installed reference electrode;

(i) Temperature correction not applied when required;

(j) Photosensitive measurement error (in CSE with a clear-view window) as a result of light striking the electrode electrolyte solution (photovoltaic effect);

(k) Improper placement of the reference electrode; and

(l) Contact between the reference electrode terminal and the electrolyte.

6.1.3 Unknown isolating devices, such as unbonded tubing or pipe compression fittings, that cause the pipe to be electrically discontinuous between the test connection and the reference electrode location.

6.1.4 Parallel path inadvertently established by test personnel contacting instrument terminals or metallic parts of the test lead circuit, such as test lead clips and reference electrodes, while a potential measurement is being made.

6.1.5 Defective or inappropriate instrument, incorrect voltage range selection, instrument not calibrated or zeroed, or a damp instrument sitting on wet earth.

6.1.6 Instrument or measurement methods that fail to avoid the effects of voltage spikes produced by current interruption.

6.1.7 Polarity of the measured value incorrectly observed.

6.1.8 Cathodic protection current-carrying conductor used, such as the negative lead of a rectifier or a lead wire from a galvanic anode, as a test lead for a pipe potential measurement.

6.1.9 Interference

6.1.9.1 Electromagnetic interference or induction resulting from AC power lines or radio frequency transmitters inducing test lead or instrument errors. This condition is often indicated by a rapidly fluctuating pointer movement on an analog instrument or erratic displays on digital voltmeters. A DC voltmeter must have sufficient AC rejection capability, which can be determined by referring to the manufacturer's specification.

6.1.9.2 Telluric or stray DC currents flowing through the earth and piping.

6.1.10 Cathodic protection current interrupter problems, such as interrupters out of synchronization, or failing to switch CP current on or off.

6.1.11 Depolarization caused by extended interruption.

6.2 Reference electrode contact resistance for different environmental conditions is reduced by:

Copyright NACE International
Provided by IHS under license with NACE
No reproduction or networking permitted without license from IHS
Licensee=University of Alberta/5966844001, User=sam, albert
Not for Resale, 05/03/2013 10:45:17 MDT

6.2.1 Soil moisture—If the surface soil is so dry that the electrical contact of the reference electrode with the electrolyte is impaired, the soil around the electrode may be moistened with water until the contact is adequate, allowing sufficient time for the reference electrodes to make good contact; using pointed reference electrode plugs to penetrate the dry crust of the soil; digging down to soil with more moisture; and using plugs that are more porous or plugs with larger surface area.

6.2.2 Contact surface area—Contact resistance may be reduced by using a reference electrode with a larger contact surface area.

6.2.3 Frozen soil—Contact resistance may be reduced by removing the frozen soil to permit electrode contact with unfrozen soil.

6.3 Concrete or asphalt paved areas—All readings shall be taken with reference electrodes that are in contact with the electrolyte. Readings shall not be taken through concrete or asphalt. Soil contact may be established through at-grade openings or by drilling a small hole through the concrete or asphalt, or by contacting a seam of soil between concrete and asphalt.

Section 7: Voltage Drops Other Than Across the Pipe Metal/Electrolyte Interface

7.1 Voltage drops included in structure-to-electrolyte potential measurements occur in the following:

7.1.1 Measurement Circuit—The voltage drop other than across the pipe metal/electrolyte interface in the measurement circuit is the sum of the individual voltage drops caused by the current flow in the measurement circuit through individual resistances that include:

(a) Instrument test lead and connection resistances;

(b) Reference electrode internal resistance;

(c) Reference electrode-to-electrolyte contact resistance;

(d) Coating resistance;

(e) Pipe metallic resistance;

(f) Electrolyte resistance;

(g) Analog meter internal resistance; and

(h) Digital meter internal impedance.

If the analog meter internal resistance or the digital meter internal impedance is not several orders of magnitude higher than the sum of the other resistances in the measurement circuit, then the magnitude of voltage drop errors in the measurement circuit becomes significant.

7.1.2 Pipe—Current flowing within the pipe wall creates a voltage drop. This voltage drop and the direction of the current shall be considered when the reference electrode is not near the pipe connection and significant current is conducted by the pipe. Consideration is needed because an error in the structure-to-electrolyte potential measurement will occur if the pipe current causes a significant voltage drop. Current directed to the pipe connection from the reference electrode causes the measured potential to be more negative by the amount of the pipe current voltage drop (see Figure 2[a]). Conversely, the potential is less negative by that amount if the pipe current direction is from the pipe connection to the reference electrode (see Figure 2[b]). Measurement of metallic voltage drops may be used to indicate the magnitude and direction of current in the structure.

7.1.3 Electrolyte—When a structure-to-electrolyte potential is measured with cathodic protection current applied, the voltage drop in the electrolyte between the reference electrode and the metal/electrolyte interface shall be considered. Measurements taken close to sacrificial or impressed current anodes can contain a large voltage drop. Such a voltage drop can consist of, but is not limited to, the following:

(a) A voltage drop caused by current flowing to coating holidays when the line is coated; and

--`,```,`,,`,,`,,,`,,,,,`,,,,,`,,-`-`,,`,,`,`,,`---

Copyright NACE International
Provided by IHS under license with NACE
No reproduction or networking permitted without license from IHS

Licensee=University of Alberta/5966844001, User=sam, albert
Not for Resale, 05/03/2013 10:45:17 MDT

(b) A voltage drop caused by large voltage gradients in the electrolyte that occur near operating anodes.

7.1.3.1 Testing to locate galvanic anodes by moving the reference electrode along the centerline of the pipe may be necessary when the locations are not known.

7.1.3.2 Lateral potential measurements or side drain potential measurements may be used to validate the effectiveness of interruption of influencing CP current.

7.1.4 Coatings—Most coatings provide protection to the pipe by reducing the pipe surface contact with the environment. Because of the relative ionic impermeability of coatings, they resist current flow. While the electrical insulating ability of coatings reduces the current required for cathodic protection, coatings are not impervious to current flowing through them. Current flow through the coating causes a voltage drop that is greater than when the pipe is bare, under the same environmental conditions.

7.2 Specialized equipment that uses various techniques to measure the impressed current waveform and to calculate a structure-to-electrolyte potential of minimized voltage drop is available. This equipment may minimize problems resulting from spiking effects, drifting of interrupters, and current from other DC sources.

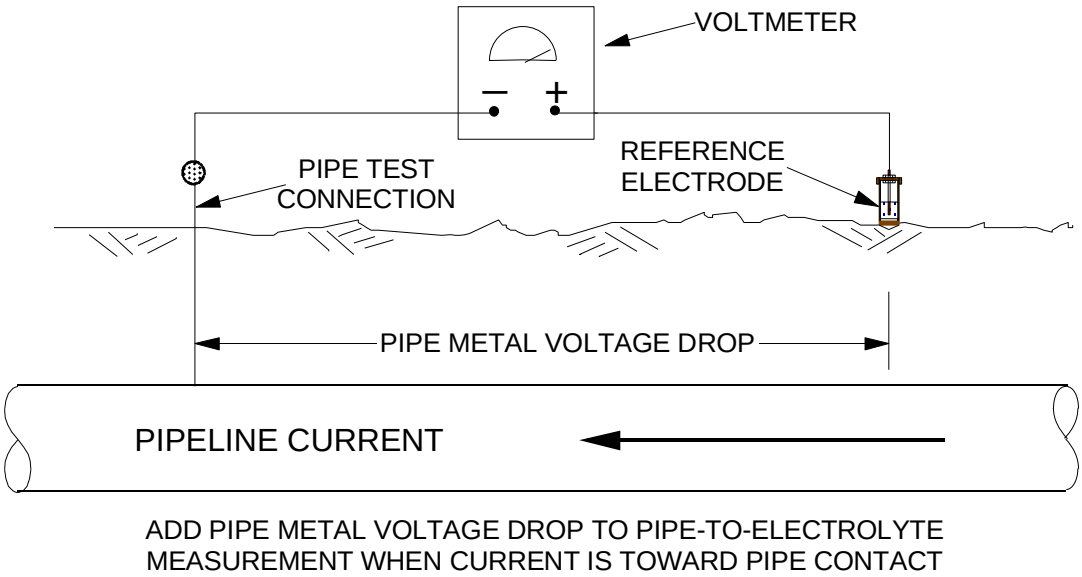

Figure 2(a): Correction when pipeline current flows toward pipe test connection.

Copyright NACE International
Provided by IHS under license with NACE
No reproduction or networking permitted without license from IHS
Licensee=University of Alberta/5966844001, User=sam, albert
Not for Resale, 05/03/2013 10:45:17 MDT

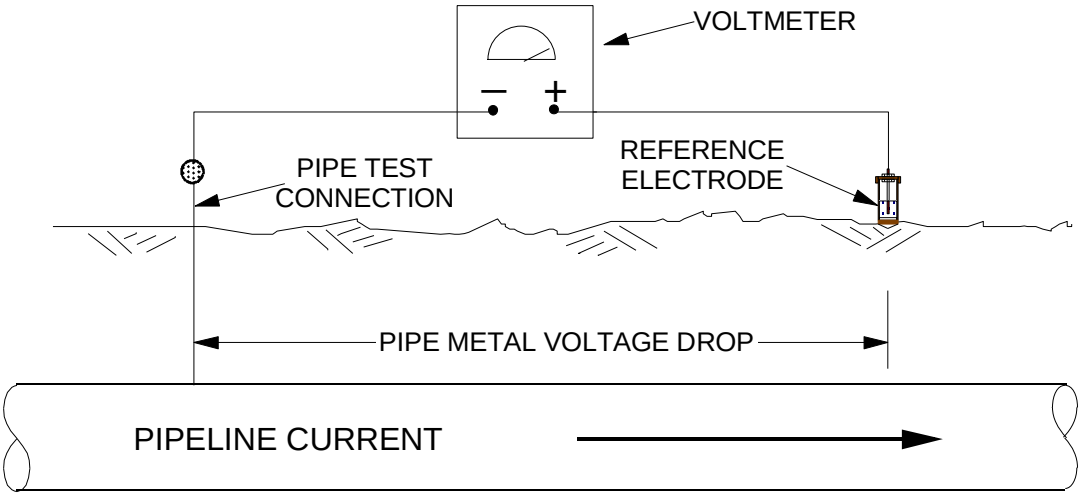

Figure 2(b): Correction when pipeline current flows away from pipe test connection.

Figure 2: Structure-to-electrolyte potential corrections for pipeline current flow.

Section 8: Test Method 1—Structure-to-Electrolyte Potential of Metallic Piping with Cathodic Protection Applied

8.1 Scope

Test Method 1 describes a procedure for measuring the structure-to-electrolyte potential of metallic piping with cathodic protection applied that is used to assess the adequacy of cathodic protection according to the criterion in NACE SP0169.

8.2 General

8.2.1 Cathodic protection current shall remain on during the measurement process. This potential is commonly referred to as the “on” potential.

8.2.2 Test Method 1 measures the structure-to-electrolyte potential as the sum of the polarized potential and any voltage drops in the circuit. These voltage drops include those through the electrolyte and pipeline coating from current sources such as impressed current, galvanic anodes, and telluric effects.

8.2.3 Because voltage drops other than those across the pipe metal/electrolyte interface may be included in this measurement, these drops shall be considered, as discussed in Paragraph 8.6.

8.2.4 Current sources that can affect the accuracy of this test method include the following:

(a) Unknown, inaccessible, or direct connected galvanic anodes;

(b) Cathodic protection systems on associated piping or foreign structures;

(c) Electric railway systems;

(d) HVDC and HVAC electric power systems;

(e) Telluric currents;

Copyright NACE International
Provided by IHS under license with NACE
No reproduction or networking permitted without license from IHS
Licensee=University of Alberta/5966844001, User=sam, albert
Not for Resale, 05/03/2013 10:45:17 MDT

(f) Galvanic or bimetallic cells;

(g) DC mining equipment;

(h) Parallel coated pipelines, electrically connected and polarized to different potentials;

(i) Uninterrupted current sources;

(j) Unintentional connections to other structures or bonds to mitigate interference; and

(k) Long-line currents.

8.3 Comparison with Other Methods

8.3.1 Advantages

(a) Minimal equipment, personnel, and vehicles are required; and

(b) Less time is required to make measurements.

8.3.2 Disadvantages

(a) Potential measured includes voltage drops other than those across the pipe metal/electrolyte interface; and

(b) Meeting the requirements for considering the significance of voltage drops (see Paragraph 8.6) can result in added time to assess adequacy of cathodic protection at the test site.

8.4 Basic Test Equipment

8.4.1 Voltmeter with adequate input impedance.

8.4.2 Two color-coded meter leads with clips for connection to the pipeline and reference electrode.

8.4.3 Reference electrode, e.g., CSE or other standard reference electrode: These reference electrodes are described in Appendix A, Paragraph A2.

8.5 Procedure

8.5.1 Before the test, verify that cathodic protection equipment has been installed and is operating properly. Sufficient time should be allowed to pass for the pipeline potentials to reach polarized values.

8.5.2 Determine the location of the site to be tested. Selection of a site may be based on:

(a) Location accessible for future monitoring;

(b) Other protection systems, structures, and anodes that may influence the structure-to-electrolyte potential;

(c) Electrical midpoints between protective devices;

(d) Known location of an ineffective coating if the line is coated; and

(e) Location of a known or suspected corrosive environment.

8.5.3 Make electrical contact between the reference electrode and the electrolyte at the test site, directly over the centerline of the pipeline or as close to it as is practicable.

8.5.4 Connect the voltmeter to the pipeline and reference electrode as described in Paragraph 5.6.

8.5.5 Record the structure-to-electrolyte potential and its polarity with respect to the reference electrode.

--`,```,``,`,,``,,,,``,,,,,``,-`-`,,`,,`,`,,`---

Copyright NACE International
Provided by IHS under license with NACE
No reproduction or networking permitted without license from IHS

Licensee=University of Alberta/5966844001, User=sam, albert
Not for Resale, 05/03/2013 10:45:17 MDT

8.6 Considering the Significance of Voltage Drops for Valid Interpretation of the Potential Measured

8.6.1 The significance of voltage drops may be considered by several methods, including:

8.6.1.1 Comparing historical levels of cathodic protection with physical evidence from the pipeline to determine whether corrosion has occurred.

8.6.1.2 Comparing soil corrosiveness with physical evidence from the pipeline to determine whether corrosion has occurred.

8.6.2 Physical evidence of corrosion may be determined by evaluating items such as:

(a) Leak history data;

(b) Buried pipeline inspection report data regarding locations of coating failures, localized conditions of more corrosive electrolyte, or substandard cathodic protection levels have been experienced; and

(c) Verification of in-line inspection tool metal loss indications by follow-up excavation of anomalies and inspection of the pipe external surface.

Section 9: Test Method 2—Polarized Structure-to-Electrolyte Potential of Metallic Piping

9.1 Test Method 2 describes a procedure for measuring the polarized structure-to-electrolyte potential of metallic piping that is used to assess the adequacy of cathodic protection according to the criterion stated in NACE SP0169. This method uses current interruption to eliminate the cathodic protection system voltage drop from the structure-to-electrolyte potential measurement.

9.2 General

9.2.1 Interrupting the known cathodic protection current source(s) eliminates voltage drops associated with the protective currents being interrupted. However, significant voltage drops may also occur because of currents from other sources, as discussed in Section 7.

9.2.2 To avoid significant depolarization of the pipe, the “off” period should be limited to the time necessary to make an accurate potential measurement. The “off” period is typically less than 3 seconds.

9.2.3 The magnitude and duration of a voltage spike caused by current interruption can vary, but the duration is typically within 0.5 second. After the current is interrupted, the time elapsed until the measurement is recorded should be long enough to avoid errors caused by voltage spiking. On-site measurements with appropriate instruments may be necessary to determine the duration and magnitude of the spiking.

9.2.4 Current sources that can affect the accuracy of this test method include the following:

(a) Impressed current or galvanic anodes;

(b) Cathodic protection systems on associated piping or foreign structures;

(c) Electric railway systems;

(d) HVDC and HVAC electric power systems;

(e) Telluric currents;

(f) Galvanic or bimetallic cells;

(g) DC mining equipment;

(h) Parallel pipelines, electrically connected and polarized to different potentials;

--`,,```,,,,````-`-`,,`,,`,`,,,,``,,,,,,`,-`-`,,`,,`,`,,`---

Copyright NACE International
Provided by IHS under license with NACE
No reproduction or networking permitted without license from IHS

Licensee=University of Alberta/5966844001, User=sam, albert
Not for Resale, 05/03/2013 10:45:17 MDT

(i) Uninterrupted current sources;

(j) Unintentional connections to other structures or bonds to mitigate interference; and

(k) Long-line currents.

9.3 Comparison with Other Methods

9.3.1 Advantages

(a) Voltage drops associated with the protective currents being interrupted are eliminated.

9.3.2 Disadvantages

(a) Additional equipment is required;

(b) Additional time, personnel, and vehicles may be required to set up equipment and to make structure-to-electrolyte potential measurements; and

(c) Some depolarization may occur during the testing, demonstrating a lower level of protection than existed prior to the testing, especially if the instant-off period is greater than 1 to 2 seconds.

(d) Test results are difficult or impossible to analyze when all influencing currents are not interrupted, such as stray currents, directly connected galvanic anodes, or foreign impressed current devices.

9.4 Basic Test Equipment

9.4.1 Voltmeter with adequate input impedance.

9.4.2 Two color-coded meter leads with clips for connection to the pipeline and reference electrode.

9.4.3 Sufficient current interrupters to cycle influential cathodic protection current sources. Also, special interrupters such as high output single-phase rectifiers, three-phase rectifiers, constant-current or constant-potential controlled rectifiers, galvanic anode groundbeds, solar-powered current sources, thermoelectric generators, wind-powered sources, and micro-turbine and engine-generator sources, may be required to interrupt current sources.

9.4.4 Reference electrode, e.g., CSE or other standard reference electrode. These reference electrodes are described in Appendix A, Paragraph A2.

9.5 Procedure

9.5.1 Before the test, verify that cathodic protection equipment has been installed and is operating properly. Sufficient time should be allowed for the pipeline potentials to reach polarized values.

9.5.2 Install and place in operation necessary interrupter equipment in all significant DC sources protecting the pipe at the test site, and place in operation with a synchronized or known off and on cycle. The off cycle should be kept as short as possible but still long enough to read a polarized structure-to-electrolyte potential after any spike as shown in Figure 3(a) has collapsed.

9.5.3 Determine the location of the site to be tested. Selection of a site may be based on:

(a) Location accessible for future monitoring;

(b) Other protection systems, structures, and anodes that may influence the structure-to-electrolyte potential;

(c) Electrical midpoints between protection devices;

(d) Known location of an ineffective coating when the pipeline is coated; and

(e) Location of a known or suspected corrosive environment.

Copyright NACE International
Provided by IHS under license with NACE
No reproduction or networking permitted without license from IHS
Licensee=University of Alberta/5966844001, User=sam, albert
Not for Resale, 05/03/2013 10:45:17 MDT

9.5.4 Make electrical contact between the reference electrode and the electrolyte at the test site, directly over the centerline of the pipeline or as close to it as is practicable.

9.5.5 Connect voltmeter to the pipeline and reference electrode as described in Paragraph 5.6.

9.5.5.1 If spiking may be present, use an appropriate instrument, such as an oscilloscope or high-speed recording device, to verify that the measured values are not influenced by a voltage spike.

9.5.6 Record the structure-to-electrolyte on and off potentials and their polarities with respect to the reference electrode.

9.6 Synchronous operation of the current interrupters and the effective operation of all interrupters during the testing period should be confirmed (refer to SP0207). Additional testing to confirm effectiveness of IR drop minimization is discussed in SP0207.

Section 10: Test Method 3—Cathodic Polarization of Metallic Piping

10.1 Test Method 3 describes the use of either pipeline polarization decay or pipeline polarization formation to determine whether cathodic protection is adequate at the test site according to the criterion in NACE SP0169. Consequently, this test method consists of two mutually independent parts, Test Methods 3a and 3b, that describe the procedures for testing. Cathodic polarization time curves for Test Methods 3a and 3b are shown in Figures 3 and 4. These are schematic drawings of generic polarization decay and formation.

10.2 Other current sources that can affect the accuracy of this test method include the following:

(a) Impressed current or galvanic anodes;

(b) Cathodic protection systems on associated piping or foreign structures;

(c) Electric railway systems;

(d) HVDC and HVAC electric power systems;

(e) Telluric currents;

(f) Galvanic or bimetallic cells;

(g) DC mining equipment;

(h) Parallel pipelines, electrically connected and polarized to different potentials;

(i) Uninterrupted current sources;

(j) Bonds or unintentional connections to other structures; and

(k) Long-line currents.

10.3 Test Method 3a—Pipeline Polarization Decay

10.3.1 Scope

Test Method 3a uses pipeline polarization decay to assess the adequacy of cathodic protection on metallic pipelines, according to the criterion stated in NACE SP0169.[3]

10.3.2 General

10.3.2.1 Interrupting the known cathodic protection source(s) eliminates voltage drops associated with the protective current(s) being interrupted.

Copyright NACE International
Provided by IHS under license with NACE
No reproduction or networking permitted without license from IHS
Licensee=University of Alberta/5966844001, User=sam, albert
Not for Resale, 05/03/2013 10:45:17 MDT

10.3.2.2 The magnitude and duration of a voltage spike caused by current interruption can vary, but the duration is typically within 0.5 second. After the current is interrupted, the time elapsed until the measurement is recorded should be long enough to avoid errors caused by voltage spiking. On-site measurements with appropriate instruments may be necessary to determine the duration and magnitude of the spiking.

10.3.2.3 If the structure is depolarized for an excessive period of time, the structure may be exposed to galvanic and stray current corrosion. Additionally, the structure may require an extended period of time for the previous level of polarization to be regained.

10.3.3 Comparison with Other Methods

10.3.3.1 Advantages

(a) This method is especially useful for bare or ineffectively coated pipe; and

(b) This method is advantageous when corrosion potentials may be low or the current required to meet a polarized potential criterion would be considered excessive.

10.3.3.2 Disadvantages

(a) Additional equipment is required;

(b) Additional time, personnel, and vehicles may be required to set up equipment and to make structure-to-electrolyte potential measurements; and

(c) Test results are difficult or impossible to analyze when all influencing currents are not interrupted, such as stray currents, directly connected galvanic anodes, or foreign impressed current devices.

10.3.4 Basic Test Equipment

10.3.4.1 Voltmeter with adequate input impedance.

10.3.4.1.1 Recording voltmeters can be useful to record polarization decay.

10.3.4.2 Two color-coded meter leads with clips for connection to the pipeline and reference electrode.

10.3.4.3 Sufficient current interrupters to disengage influential cathodic protection current sources. Also, special interrupters may be required to interrupt current sources such as high-output single-phase rectifiers, three-phase rectifiers, constant-current or constant-potential controlled rectifiers, galvanic anode groundbeds, solar-powered current sources, thermoelectric generators, wind-powered sources, and micro-turbine and engine-generator sources.

--`,,`,,`-`-`,,`,,`,`,,`---

Copyright NACE International
Provided by IHS under license with NACE
No reproduction or networking permitted without license from IHS

Licensee=University of Alberta/5966844001, User=sam, albert
Not for Resale, 05/03/2013 10:45:17 MDT

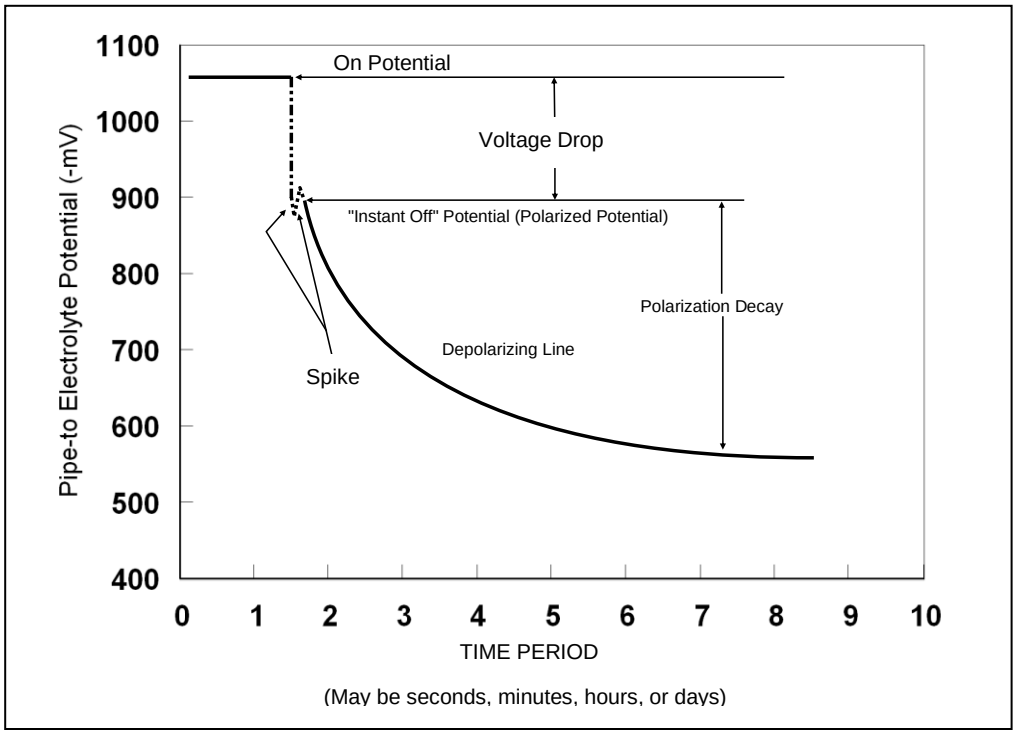

Figure 3: Polarization decay.

10.3.4.4 Reference electrode

10.3.4.4.1 CSE

10.3.4.4.2 Other standard reference electrodes may be substituted for the CSE. These reference electrodes are described in Appendix A, Paragraph A2.

10.3.5 Procedure

10.3.5.1 Before the test, verify that cathodic protection equipment has been installed and is operating properly. Time be allowed for the pipeline potentials to reach polarized values.

10.3.5.2 Install and place in operation necessary interrupter equipment in all significant DC sources protecting the pipe at the test site, and place in operation with a synchronized or known off and on cycle. The “off” cycle should be kept as short as possible but still long enough to read a polarized structure-to-electrolyte potential after any spike as shown in Figure 3(a) has collapsed.

10.3.5.3 Determine the location of the site to be tested. Selection of a site may be based on:

(a) Location accessible for future monitoring;

(b) Other protection systems, structures, and anodes that may influence the structure-to-electrolyte potential;

(c) Electrical midpoints between protection devices;

(d) Known location of an ineffective coating if the pipeline is coated; and

(e) Location of a known or suspected corrosive environment.

10.3.5.4 Make electrical contact between the reference electrode and the electrolyte at the test site, directly over the centerline of the pipeline or as close to it as is practicable.

Copyright NACE International
Provided by IHS under license with NACE
No reproduction or networking permitted without license from IHS
Licensee=University of Alberta/5966844001, User=sam, albert
Not for Resale, 05/03/2013 10:45:17 MDT

10.3.5.4.1 Identify the location of the reference electrode when measuring the instant-off potential so that the depolarized potential can be measured at the same location.

10.3.5.5 Connect the voltmeter to the pipeline and reference electrode as described in Paragraph 5.6.

10.3.5.5.1 If spiking may be present, use an appropriate instrument, such as an oscilloscope or high-speed recording device, to verify that the measured values are not influenced by a voltage spike.

10.3.5.6 Measure and record the structure-to-electrolyte on and instant-off potentials and their polarities with respect to the reference electrode.

10.3.5.6.1 The instant-off structure-to-electrolyte potential is the baseline potential from which the polarization decay is calculated.

10.3.5.7 Turn off sufficient cathodic protection current sources that influence the pipe at the test site (including all interference sources) until the desired cathodic polarization decay has been attained or a stable depolarized level has been reached.

10.3.5.7.1 Measurements shall be made at sufficiently frequent intervals to avoid having the CP current off for an unnecessarily extended period.

10.3.5.7.2 When extended polarization decay time periods are anticipated, it may be desirable to use recording voltmeters to determine when adequate polarization decay or a corrosion potential has been attained.

10.4 Test Method 3b—Pipeline Polarization Formation

10.4.1 Scope

Test Method 3b uses pipeline polarization formation to assess the adequacy of cathodic protection at a test site on piping according to the criteria stated in NACE SP0169.[3]

10.4.2 General

Metallic pipelines may be adequately cathodically protected if applying cathodic protection causes the desired polarization change with respect to a reference potential.

10.4.3 Comparison with Other Methods

10.4.3.1 Advantages

(a) This method is especially useful for bare or ineffectively coated pipe; and

(b) This method is advantageous when corrosion potentials may be low or the current required to meet a polarized criterion would be considered excessive.

10.4.3.2 Disadvantages

(a) Additional equipment is required;

(b) This method is advantageous when corrosion potentians may be low or the current required to meet a polarized criterion would be considered excessive.

10.4.4 Basic Test Equipment

10.4.4.1 Voltmeter with adequate input impedance.

10.4.4.2 Two color-coded meter leads with clips for connection to the pipeline and reference electrode.

10.4.4.3 Sufficient current interrupters to reenergize influential cathodic protection current sources. Also, special interrupters may be required to interrupt current sources such as high-output single-phase rectifiers, three-phase

Copyright NACE International
Provided by IHS under license with NACE
No reproduction or networking permitted without license from IHS
Licensee=University of Alberta/5966844001, User=sam, albert
Not for Resale, 05/03/2013 10:45:17 MDT

rectifiers, constant-current or constant-potential controlled rectifiers, galvanic anode groundbeds, solar-powered current sources, thermoelectric generators, wind-powered sources, and micro-turbine and engine-generator sources.

10.4.4.4 Reference electrode, CSE, or other standard reference electrode. These reference electrodes are described in Appendix A, Paragraph A2.

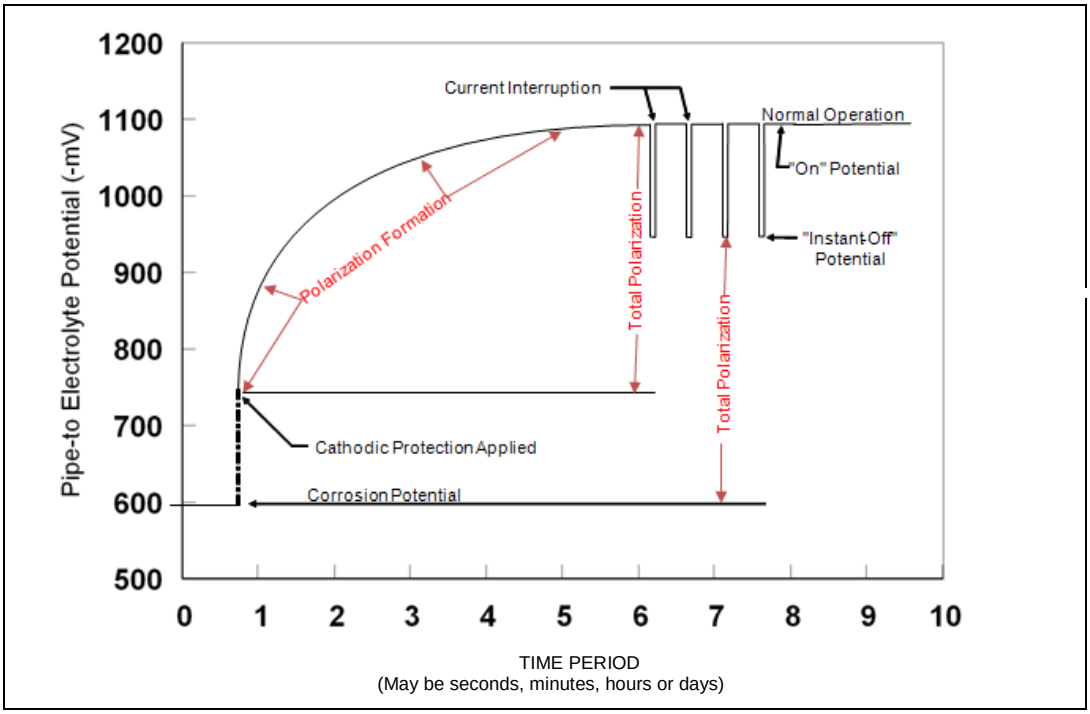

Figure 4: Polarization formation.

10.4.5 Procedure

10.4.5.1 Before the test, verify that cathodic protection equipment has been installed but is not energized.

10.4.5.2 Determine the location of the site to be tested. Selection of a site may be based on:

(a) Location accessible for future monitoring;

(b) Other protection systems, structures, and anodes that may influence the structure-to-electrolyte potential;

(c) Electrical midpoints between protection devices;

(d) Known location of an ineffective coating if the line is coated; and

(e) Location of a known or suspected corrosive environment.

10.4.5.3 Make electrical contact between the reference electrode and the electrolyte at the test site, directly over the centerline of the pipeline or as close to it as is practicable.

10.4.5.3.1 Identify the location of the reference electrode when measuring the instant-off potential so that the depolarized potentials can be measured at the same location.

10.4.5.4 Connect the voltmeter to the pipeline and reference electrode as described in Paragraph 5.6.

10.4.5.5 Measure and record the structure-to-electrolyte corrosion potential and its polarity with respect to the reference electrode.

Copyright NACE International
Provided by IHS under license with NACE
No reproduction or networking permitted without license from IHS
Licensee=University of Alberta/5966844001, User=sam, albert
Not for Resale, 05/03/2013 10:45:17 MDT

10.4.5.5.1 This potential is the value from which the polarization formation is calculated.

10.4.5.6 Apply the cathodic protection current. Time should be allowed for the pipeline potentials to reach polarized values.

10.4.5.6.1 When extended polarization gain time periods are anticipated, it may be desirable to use recording voltmeters to determine when adequate polarization gain or a protective potential has been attained.

10.4.5.7 Install and place in operation necessary interrupter equipment in all significant DC sources protecting the pipe at the test site, and place in operation with a synchronized or known off and on cycle. The off cycle should be kept as short as possible but still long enough to read a polarized structure-to-electrolyte potential after any spike as shown in Figure 3(a) has collapsed.

10.4.5.8 Measure and record the structure-to-electrolyte "on and off" potentials and their polarities with respect to the reference electrode. The difference between the "off" potential and the corrosion potential is the amount of polarization formation.

10.4.5.8.1 If spiking may be present, use an appropriate instrument, such as an oscilloscope or high-speed recording device, to verify that the measured values are not influenced by a voltage spike.

References

1. ANSI/NACE SP0607/ISO 15589-2 (MOD) (latest revision), "Petroleum and natural gas industries – Cathodic protection of pipeline transportation systems – Part 2: Offshore pipelines" (Houston, TX: NACE).

2. NACE SP0176 (latest revision), "Corrosion Control of Submerged Areas of Permanently Installed Steel Offshore Structures Associated with Petroleum Production" (Houston, TX: NACE).

3. NACE SP0169 (latest revision), "Control of External Corrosion on Underground or Submerged Metallic Piping Systems" (Houston, TX: NACE).

4. NACE/ASTM G193 (latest revision), "Standard Terminology and Acronyms Relating to Corrosion" (Houston, TX: NACE and West Conshohocken, PA: ASTM.[3]

5. NACE SP0177 (latest revision), "Mitigation of Alternating Current and Lightning Effects on Metallic Structures and Corrosion Control Systems" (Houston, TX: NACE).

6. NACE SP0207 (latest revision), "Performing Close-Interval Potential Surveys and DC Surface Potential Gradient Surveys on Buried or Submerged Metallic Pipelines" (Houston, TX: NACE).

7. Work in progress by NACE Task Group 388, "Cathodic Protection Rectifier Safety" (Houston, TX: NACE).

8. F.J. Ansuini, J.R. Dimond, "Factors Affecting the Accuracy of Reference Electrodes," *MP* 33, 11 (1994), p. 14.

9. W. Von Baeckmann, W. Schwenk, W. Prinz, eds., *Handbook of Cathodic Corrosion* Protection, 3rd ed (Houston, TX: Gulf Publishing, 1989).

10. NACE Standard RP0104 (latest revision), "The Use of Coupons for Cathodic Protection Monitoring Applications" (Houston, TX: NACE).

Bibliography

Applegate, L.M. *Cathodic Protection*. New York, NY: McGraw-Hill, 1960.

Bushman, J.B., and F.E. Rizzo. "IR Drop in Cathodic Protection Measurements." *MP* 17, 7 (1978): pp. 9-13.

Bianchetti, R., ed. *Peabody's Control of Pipeline Corrosion.* 2nd ed. Houston, TX: NACE, 2001.

[3] ASTM International, 100 Barr Harbor Dr., West Conshohocken, PA 19428-2959.

Copyright NACE International
Provided by IHS under license with NACE
No reproduction or networking permitted without license from IHS
Licensee=University of Alberta/5966844001, User=sam, albert
Not for Resale, 05/03/2013 10:45:17 MDT

Bianchetti, R., ed. *Peabody's Control of Pipeline Corrosion.* 2nd ed. Houston, TX: NACE, 2001.

Cathodic Protection Criteria — A Literature Survey. Ed. coord. R.A. Gummow. Houston, TX: NACE, 1989.

Corrosion Control/System Protection, Book TS-1, Gas Engineering and Operating Practices Series. Arlington, VA: American Gas Association,[4] 1986.

Dabkowski, J., and T.A. Hamilton. "A Review of Instant-Off Polarized Potential Measurement Errors." CORROSION 93, paper no. 561. Houston, TX: NACE, 1993.

Dearing, B.M. "The 100-mV Polarization Criterion." *MP* 33, 9 (1994): pp. 23-27.

DeBethune, A.J. "Fundamental Concepts of Electrode Potentials." CORROSION 9, 10 (1953): pp. 336-344.

Escalante, E., ed. *Underground Corrosion, ASTM STP 741*. Philadelphia, PA: ASTM, 1981.

Ewing, S.P. "Potential Measurements for Determining Cathodic Protection Requirements." CORROSION 7, 12 (1951): pp. 410-418.

Gummow, R.A. "Cathodic Protection Potential Criterion for Underground Steel Structures." *MP* 32, 11 (1993): pp. 21-30.

Jones, D.A. "Analysis of Cathodic Protection Criteria." CORROSION 28, 11 (1972): pp. 421-423.

Parker, M.E. *Pipeline Corrosion and Cathodic Protection.* 2nd ed. Houston, TX: Gulf Publishing, 1962.

Stephens, R.W. "Surface Potential Survey Procedure and Interpretation of Data," in *Proceedings of the Appalachian Corrosion Short Course,* held May 1980. Morgantown, WV: University of West Virginia, 1980.

West, L.H. "Fundamental Field Practices Associated with Electrical Measurements," in *Proceedings of the Appalachian Corrosion Short Course,* held May 1980. Morgantown, WV: University of West Virginia, 1980.

Appendix A
Reference Electrodes
(Mandatory)

A1 Pipeline metals have unstable electrical potentials when placed in an electrolyte such as soil or water. However, a half-cell that has a stable, electrochemically reversible potential characterized by a single, identifiable half-cell reaction is a reference electrode. The stability of a reference electrode makes it useful as an electrical reference point or benchmark for measuring the potential of another metal in soil or water. When connected by a voltmeter to another metal in soil or water, the reference electrode becomes one half of a corrosion cell. The reference electrodes used for measuring potentials on buried or submerged pipelines have voltage values that are normally positive with respect to steel.

A2 Pipeline potentials are usually measured using either a saturated copper/copper sulfate (CSE), a silver/silver chloride (Ag/AgCl), or a saturated potassium chloride (KCl) calomel reference electrode (SCE). CSEs are usually used for measurements when the electrolyte is soil or fresh water, and less often for salt water. When a CSE is used in a high-chloride environment, the stability (i.e., lack of contamination) of the electrode must be determined before the readings may be considered valid. Ag/AgCl reference electrodes are usually used for seawater environments. The SCE reference electrodes are more often used for laboratory work because they are generally less rugged, unless specially constructed, than the other two reference electrodes.

A2.1 The voltage equivalents (at 25 °C [77 °F]) to negative 850 mV referred to a CSE are:

A2.1.1 Ag/AgCl seawater reference electrode (without controlled electrolyte) used in 25 ohm-cm seawater: –800 mV,[8]

[4] American Gas Association (AGA), 400 N. Capitol St. NW, Suite 450, Washington, DC 20001

Copyright NACE International
Provided by IHS under license with NACE
No reproduction or networking permitted without license from IHS
Licensee=University of Alberta/5966844001, User=sam, albert
Not for Resale, 05/03/2013 10:45:17 MDT

A2.1.2 Saturated SCE reference electrode: –780 mV, and

A2.1.3 Ag/AgCl reference electrode used in saturated KCl electrolyte: approximately –740 mV.

Note: If the reference electrode is at a temperature significantly different from 25 °C (77 °F), appropriate correction factors shall be applied.[8]

Table A1: Reference Electrode Temperature Calibration[9]

Reference Electrode	Electrolyte	Correction Factor (mV/ºC)
Cu-$CuSO_4$	Sat. $CuSO_4$	0.97
Ag-AgCl	Sat. KCl	1.0
Ag-Saline	Sea Water	
Sat. Calomel	Sat KCl	0.65
1 *M* Calomel	1 *M* KCl	0.24

A2.2 A CSE is composed of a pure copper rod immersed in a saturated solution of distilled water and copper sulfate ($CuSO_4$). The pure copper rod extends from one end of the reference electrode, providing a means of connection to a voltmeter. The other end of the reference electrode has a porous plug that is used to make an electrical contact with the pipeline electrolyte. Undissolved $CuSO_4$ crystals in the reference electrode should always be visible to ensure the solution is saturated. The reference is reasonably accurate (within 5 mV when measured against a reference electrode known to be free of contamination). The advantages of this reference electrode are low cost and ruggedness.

A2.3 Ag/AgCl reference electrodes are used in marine and soil environments. The construction and the electrode potential vary with the application and with relation to the potential of a CSE reference electrode. The electrolytes involved may be natural seawater, saturated KCl, or other concentrations of KCl. The user shall utilize the manufacturer's recommendations and potential values for the type of Ag/AgCl cell used. The Ag/AgCl reference electrode has a high accuracy (typically less than 2 mV when handled and maintained correctly) and is very durable.

A2.4 A SCE reference electrode for laboratory use is composed of a platinum wire in contact with a mercury/mercurous chloride mixture contacting a saturated KCl solution enclosed in a glass container, a voltmeter connection on one end, and a porous plug on the other end for contact with the pipeline electrolyte. The presence of mercury in this electrode makes it environmentally less desirable for field use. For field use, a more rugged, polymer-body, gel-filled KCl calomel electrode is available, though modifications may be necessary to increase contact area with the environment.

A2.5 In addition to these standard reference electrodes, an alternative metallic material or structure may be used in place of the saturated CSE if the stability of its electrode potential is ensured and if its voltage equivalent referred to a CSE is established.

A2.6 Permanently installed reference electrodes may be used if their accuracy has been verified.

A3 It is good practice to verify the accuracy of reference electrodes to be used in the field by comparing them with a carefully prepared master reference electrode that, to avoid contamination, is never used for field measurements. The accuracy of a field reference electrode can be verified by placing it along with the master reference electrode in a common solution, such as fresh water, and measuring the voltage difference between the two electrodes. A maximum voltage difference of 5 mV between a master reference electrode and another reference electrode of the same type is usually satisfactory for pipeline potential measurements. When reference electrode-to-reference electrode potential measurements are made in the field, it is necessary that electrodes with matching potentials be used.

Copyright NACE International
Provided by IHS under license with NACE
No reproduction or networking permitted without license from IHS
Licensee=University of Alberta/5966844001, User=sam, albert
Not for Resale, 05/03/2013 10:45:17 MDT

Appendix B
Net Protective Current
(Nonmandatory)

This appendix is considered nonmandatory, although it may contain mandatory language. It is intended only to provide supplementary information or guidance. The user of this standard is not required to follow, but may choose to follow, any or all of the provisions herein.

B1 NACE SP0169 states that measuring the net protective current from the electrolyte to the pipe surface by an earth current technique at predetermined current discharge points may be sufficient on bare or ineffectively coated pipelines when long-line current corrosion activity is of primary concern. Refer to NACE SP0207 for additional information on net protective current.

B1.1 This technique is a measure of the net protective current from the electrolyte onto the pipe surface and is most practicable for use on bare pipelines.

B1.2 The electrolyte current measurements often are not meaningful in multiple pipe rights-of-way, high-resistivity electrolyte, deeply buried pipe, large-diameter pipe, stray current areas, and pipe that is not electrically isolated from other underground structures. Using this technique does not confirm elimination of local corrosion cell action.

B2 Measurement Techniques for Net Protective Current

B2.1 The principal anodic areas along the pipeline should be located. Sufficient cathodic protection current should be applied to cause a net protective current from the electrolyte to the pipe surface. The structure-to-electrolyte potential measurements for these techniques are performed on piping that is not cathodically protected.

B2.2 The two-reference-electrode potential survey or a structure-to-electrolyte potential survey method is used to detect the probable current discharge (anodic) areas along a pipeline.

B2.2.1 The two-reference-electrode method measures the direction of the potential gradient along the earth's surface. Measurements should be made at 3 m (10 ft) intervals directly over the centerline of the pipe. The instrument positive terminal is connected to the lead (front) reference electrode in the direction of survey travel. A suspected anodic condition is indicated by a change of the instrument polarity. Suspected anodic conditions and their magnitudes can be confirmed by making two-reference-electrode tests laterally to the pipeline. One reference electrode is placed over the line and the other spaced laterally the same distance as for the transverse measurements over the line. These tests should be made on both sides of the pipe to verify that current is leaving the line.

B2.3 The structure-to-electrolyte potential survey, when used as a tool for locating probable anodic conditions on unprotected pipe, should be conducted by making individual readings at 3 m (10 ft) intervals along the route of the pipe. Probable anodic conditions are indicated at survey points where the most negative readings are determined. It may be desirable to confirm these suspected anodic conditions by making the two-reference-electrode test lateral to the pipe as described for the two-reference-electrode method.

--`,```,``,`,,``,,,,``,,,,,``,-`-`,,`,,`,`,,`---

Copyright NACE International
Provided by IHS under license with NACE
No reproduction or networking permitted without license from IHS

Licensee=University of Alberta/5966844001, User=sam, albert
Not for Resale, 05/03/2013 10:45:17 MDT

Appendix C
Using Coupons to Determine Adequacy of Cathodic Protection
(Nonmandatory)

This appendix is considered nonmandatory, although it may contain mandatory language. It is intended only to provide supplementary information or guidance. The user of this standard is not required to follow, but may choose to follow, any or all of the provisions herein.

Note that this is not the only method that may be used, but it does describe a logical use of the information.

C1 Coupons have been used judiciously, particularly when accompanied by other engineering tools and data, to evaluate whether cathodic protection at a test site complies with a given criterion. See ANSI/NACE Standard RP0104[10] for more information on coupons. The following test procedures are suggested as guides.

C2 Cathodic Protection Coupon Test Method 1—Polarized Structure-to-Electrolyte Potential of Metallic Piping

C2.1 Scope

This method uses a cathodic protection coupon to assess the adequacy of cathodic protection on metallic pipelines according to the criterion stated in NACE SP0169.[3]

C2.2 General

C2.2.1 This method uses a coupon to assess the adequacy of cathodic protection applied to a selected test site. A cathodic protection coupon is a metal sample representing the pipeline at the test site and used for cathodic protection testing. Material, size, shape, and other considerations for the coupon are:

(a) Nominally of the same metal and surface condition as the pipe;

(b) Small to avoid excessive current drain on the cathodic protection system;

(c) Placed at pipe depth in the same backfill as the pipe;

(d) Prepared with all mill scale and foreign materials removed from the surface; and

(e) Placed at a known location of an ineffective coating when the line is coated.

C2.2.2 A coupon has an insulated test lead brought above ground and, during normal operations, connected to a pipeline test lead. The coupon receives cathodic protection current and represents the pipeline at the test site. For testing purposes, this connection is opened, and the polarized potential of the coupon is measured. The time the connection is open to measure the coupon's "off" potential should be minimized to avoid significant depolarization of the coupon. The "off" period is typically less than 3 seconds. When possible, coupon current direction and magnitude should be verified, using a current clip gauge or resistor permanently placed in series with the coupon lead. Measurements showing discharge of current from the coupon should be reason to question the validity of using a coupon at the test site.

C2.2.3 The significance of voltage drops caused by currents from other sources may not be a problem when a coupon is used to represent the pipeline. The coupon's small size may reduce the effect of these voltage drops. The magnitude of these voltage drops can be quantified by interrupting cathodic protection current sources while the coupon is disconnected and noting whether there is a shift in the coupon-to-electrolyte potential.

C2.3 Comparison with Other Methods

C2.3.1 Advantages

(a) Can provide a polarized coupon-to-electrolyte potential, free of voltage drop, with a minimum of specialized equipment, personnel, and vehicles; and

Copyright NACE International
Provided by IHS under license with NACE
No reproduction or networking permitted without license from IHS
Licensee=University of Alberta/5966844001, User=sam, albert
Not for Resale, 05/03/2013 10:45:17 MDT

(b) Can provide a more comprehensive evaluation of the polarization at the test site than conventional structure-to-electrolyte potential measurements that may be influenced by the location, size, and number of coating holidays, when the pipeline is coated.

C2.3.2 Disadvantage

(a) Can have high initial costs to install coupons, especially for existing pipelines.

Copyright NACE International
Provided by IHS under license with NACE
No reproduction or networking permitted without license from IHS
Licensee=University of Alberta/5966844001, User=sam, albert
Not for Resale, 05/03/2013 10:45:17 MDT

ISBN 1-57590-047-5
NACE International

Copyright NACE International
Provided by IHS under license with NACE
No reproduction or networking permitted without license from IHS

Licensee=University of Alberta/5966844001, User=sam, albert
Not for Resale, 05/03/2013 10:45:17 MDT